T: +44(0) 1202 307700 | E: info@packline.co.uk | W: www.packline.co.uk

MULE 300 - 500

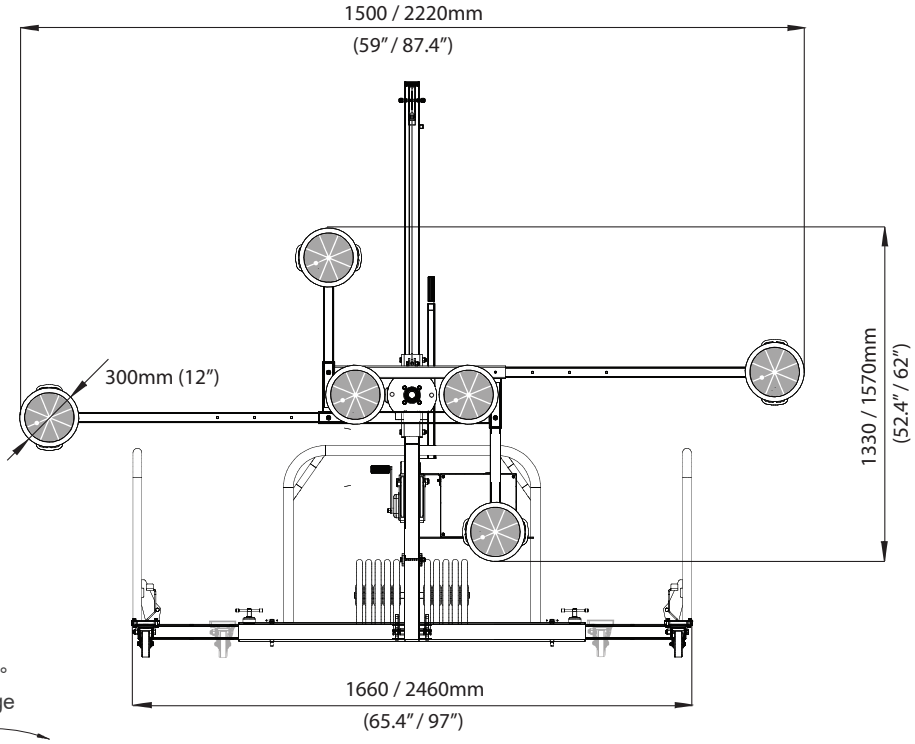

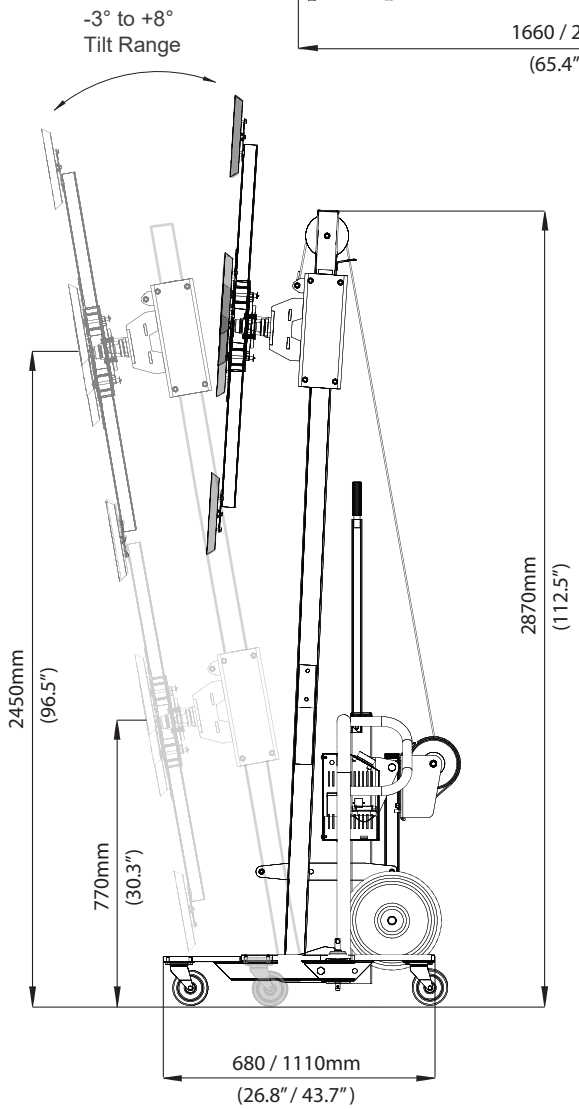

1. 300kg capacity (660lbs)
2. Upgrade to 500kg (1100lbs) available
3. Small footprint with counterweights
4. Front extension legs without counterweights
5. Rotates glass 360°
6. Handles glass 3660 x 2440mm
7. 6 x 300mm (12") vac cups
8. 4 adjustable/removable cups
9. 12 v battery powered vacuum pump
10. Castor legs adjust laterally
11. Mast tilt range -3 to +8 degrees
12. Machine weight - 300kg + 150kg c/w 660lbs + 330lbs

Unit 28 Newtown Business Park, Ringwood Road, Pool, Dorset, BH12 3LL.

© Packline Ltd 2018